PU-IR01-KIT

Infra Red over CAT5e/6 Extender Set

The IR Extender and the Repeater set is perfect for controlling IR controlled source equipment over long distances. Up to five sources can be controlled using this extender set. Two sources can be controlled located locally to the repeater, whilst the remaining three sources can be controlled locally to the extender, which can be located up to 250m away via CAT5/6 cable. This system allows for the sources to be controlled by their own original remote controls, from extended distances. A 5-eye emitter accessory can be supplied for additional control of extra source equipment.

PANELS

Front

Rear

DIAGRAM

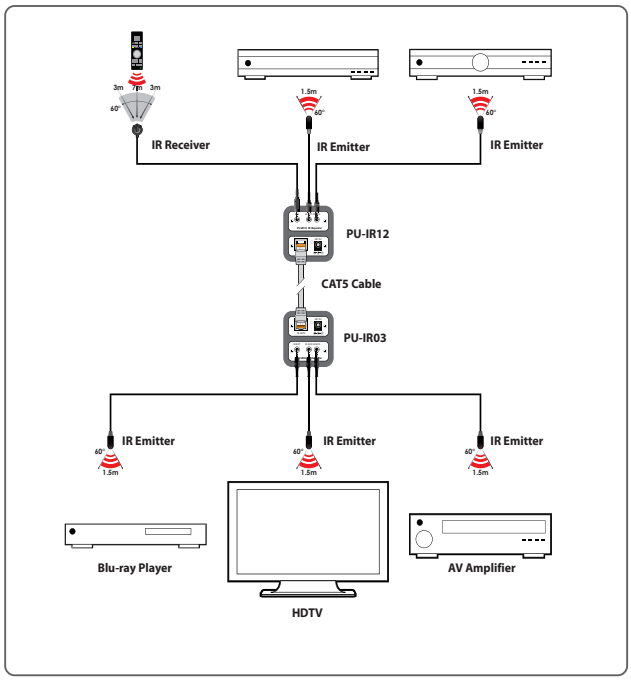

FEATURES

- Supports five outputs (two from the repeater, three from the extender)
- Control source equipment from a distance of up to 250 metres away, via CAT5/6 cable
- Transmits infrared signals only
- Allows the use of existing remote controls
- IR Receiver's frequency is at 20~60 kHz

SPECIFICATIONS

PU-IR03

Interfaces	
Input Port	1x RJ45 [1x IR Propriety Data]
Output Port	3x 3.5mm Stereo mini-jack [3x Infra Red Emitter]

PU-IR12

Interfaces	
Input Port	1x 3.5mm Stereo mini-jack [1x Infra Red Receiver]
Output Port	2x 3.5mm Stereo mini-jack [2x Infra Red Emitter] 1x RJ45 [1x IR Propriety Data]

Power	
Power Supply	5V/1.2A
Power Consumption	[RX] 0.5W, [TX] 0.5W

Enclosure	
Chassis Material	Aluminum
Chassis Colour	Black
Dimensions (W×H×D)	[PU-IR03] 62 mm × 23 mm × 50 mm [PU-IR12] 62 mm × 23 mm × 50 mm
Weight	[TX] 50g, [RX] 50g

ORDERING INFORMATION

Model No.	Product Description
PU-IR01-KIT	Infra Red over CAT5e/6 Extender Set