SDV-F1H-TX

SDVoE Full 4K 10G AV over IP Fiber Based Small Form Factor Transmitter

OPERATION MANUAL

SDVoE™ ALLIANCE

HDMI®
HIGH-DEFINITION MULTIMEDIA INTERFACE

The terms HDMI, HDMI High-Definition Multimedia Interface, and the HDMI Logo are trademarks or registered trademarks of HDMI Licensing Administrator, Inc.

DISCLAIMERS

The information in this manual has been carefully checked and is believed to be accurate. CYP (UK) Ltd assumes no responsibility for any infringements of patents or other rights of third parties which may result from its use.

CYP (UK) Ltd assumes no responsibility for any inaccuracies that may be contained in this document. CYP (UK) Ltd also makes no commitment to update or to keep current the information contained in this document.

CYP (UK) Ltd reserves the right to make improvements to this document and/or product at any time and without notice.

COPYRIGHT NOTICE

No part of this document may be reproduced, transmitted, transcribed, stored in a retrieval system, or any of its part translated into any language or computer file, in any form or by any means—electronic, mechanical, magnetic, optical, chemical, manual, or otherwise—without express written permission and consent from CYP (UK) Ltd.

© Copyright 2026 by CYP (UK) Ltd.

All Rights Reserved.

Version 1.1

TRADEMARK ACKNOWLEDGMENTS

All products or service names mentioned in this document may be trademarks of the companies with which they are associated.

SAFETY PRECAUTIONS

Please read all instructions before attempting to unpack, install or operate this equipment and before connecting the power supply. Please keep the following in mind as you unpack and install this equipment:

- Always follow basic safety precautions to reduce the risk of fire, electrical shock and injury to persons.
- To prevent fire or shock hazard, do not expose the unit to rain, moisture or install this product near water.
- Never spill liquid of any kind on or into this product.
- Never push an object of any kind into this product through any openings or empty slots in the unit, as you may damage parts inside the unit.
- Do not attach the power supply cabling to building surfaces.
- Use only the supplied power supply unit (PSU). Do not use the PSU if it is damaged.
- Do not allow anything to rest on the power cabling or allow any weight to be placed upon it or any person walk on it.
- To protect the unit from overheating, do not block any vents or openings in the unit housing that provide ventilation and allow for sufficient space for air to circulate around the unit.
- Please completely disconnect the power when the unit is not in use to avoid wasting electricity.

VERSION HISTORY

REV.	DATE	SUMMARY OF CHANGE
Ver 1.00	2025/12/15	Initial Release

CONTENTS

1. Introduction 1

2. Applications 1

3. Package Contents 1

4. System Requirements 2

5. Features 2

6. Operation Controls and Functions 3

6.1 Front Panel 3

6.2 Rear Panel 4

6.3 Basic AV Extension 5

6.3.1 Point-to-Point (One Way) 5

6.4 Advanced AV Extension 6

6.4.1 IP Master Controller 6

6.4.2 Configuration Examples 7

7. Connection Diagram 9

8. Specifications 10

8.1 Technical Specifications 10

8.2 Video Specifications 11

8.3 Audio Specifications 13

8.3.1 Digital Audio 13

8.4 Cable Specifications 14

9. Acronyms 15

1. INTRODUCTION

The SDV-F1H-TX is designed for high-quality, IP routable, AV extension up to 4K@60 4:4:4 with minimum latency. The use of interchangeable, field replaceable, SFP+ modules allows for transmission distances of up to 120km (Maximum transmission distance depends on the SFP+ modules used). Advanced HDMI content such as HDR (High Dynamic Range), 10-bit colour and multi-channel HD Bitstream audio can be transmitted in passthrough mode.

The small and compact size design enhances the flexibility of installation. When combined with the optional IP Master Controller, the SDV-CS8, the functionality of the transmitter expands exponentially. Multiple transmitters and receivers may be combined with one or more 10-Gigabit fiber Ethernet switches and the units can be used together to form a distributed video matrix, a multiviewer system, or a video wall system adding to their flexibility in large event installations. Advanced control such as firmware update can also be performed conveniently through the optional controller hardware.

2. APPLICATIONS

- Video and audio over fiber extension
- Point-to-Point Secure Video Conferencing
- Hotel or convention centre display
- Medical application uncompressed video transmission
- Multi-monitor broadcast
- Distributed video matrix system
- Distributed video wall system

3. PACKAGE CONTENTS

- 1× 4K60 HDMI AV over IP Transmitter
- 1× 5V/2.6A DC Power Adapter
- 1×10G SFP+ module
- 1× Operation Manual

4. SYSTEM REQUIREMENTS

- HDMI source equipment such as a media player, video game console, PC, or set-top box
- IEEE 802.3ae compatible SFP+ fiber module supporting a dual-optical fiber connection style, such as LC, or a pre-terminated crossover dual-optical fiber cable

  Note: Single-mode and multi-mode support is dependent on the SFP+ modules used
- A 10-Gigabit fiber Ethernet network switch with jumbo frame and IGMP snooping support is required for distributed video systems (Optional, required for multi-transmitter/receiver systems)
- IP Master Controller or PC control software to configure distributed matrix, video wall, or multi-view systems (Optional)

5. FEATURES

- HDMI 2.0 and DVI 2.0 compatible
- HDCP 2.2 and HDCP 1.x compliant
- Signal transmission interfaces with 10-Gigabit Ethernet switches via XFI (IEEE 802.3ae) compatible SFP+ fiber modules
- 4K60 Extension up to 300m as standard
- 4K60 Extension up to 120km by replacing supplied SFP+ module(maximum distance depends on the SFP+ module and type of fiber used)
- IP switchable with minimum latency (requires optional control centre or control software)
- Ultra-light compression, lossless for most content
- Supports pass-through of 10/12-bit HDR sources (Point-to-Point and Bypass modes only)
- Supports pass-through of audio formats including LPCM (up to 8 channels), Bitstream and HD Bitstream from HDMI or DP sources
- Signal transmission interfaces with 10-Gigabit Ethernet switches via XFI (IEEE 802.3ae) compatible SFP+ fiber modules

6. OPERATION CONTROLS AND FUNCTIONS

6.1 Front Panel

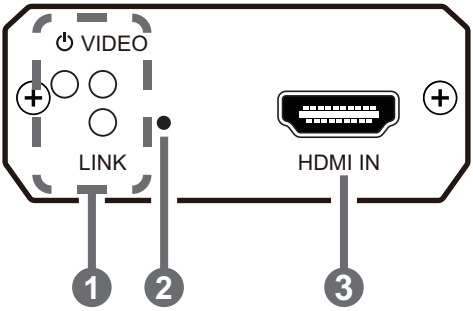

1. **STATUS LED BLOCK:**
   - **POWER LED:** This LED will illuminate to indicate the unit is on and receiving power or flash in update mode.
   - **VIDEO LED:** This LED indicates video streaming activity over the optical fiber port. It will illuminate green when a video signal is being transmitted. When no video is active the LED will remain off, even if the streaming connection is valid.
   - **LINK LED:** This LED will illuminate and blink to indicate data transmission activity across the optical fiber streaming connection.
2. **Reset Pinhole:** Press this recessed button to reboot the unit and all settings will be returned to the factory defaults.
3. **HDMI IN Port:** Connect to HDMI source equipment such as a media player, game console, or set-top box.

6.2 Rear Panel

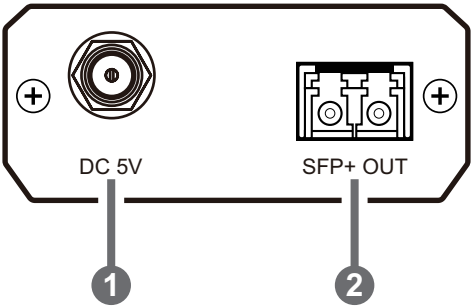

1. **DC 5V Port:** Plug the 5V DC power adapter into this port and connect it to an AC wall outlet for power.
2. **SFP+ OUT Port:** Insert a standard SFP+ module and connect the appropriate optical cable to allow data transmission to a compatible receiver for Point-to-Point extension or to a 10-Gigabit fiber Ethernet switch for distributed matrixing (requires IP Master Controller or control software), with a single optical cable for extension of all data signals.

   Note: The SFP+ module must support a dual-optical fiber connection style, such as LC, or be pre-terminated dual-optical fiber cables. Single-mode and multi-mode support is dependent on the SFP+ modules used.

6.3 Basic AV Extension

6.3.1 Point-to-Point (One Way)

The most basic extension configuration available is a point-to-point system with a single transmitter connected directly to a single receiver. In this configuration the HDMI input on the transmitter side is transmitted to the connected receiver side without modification to the audio or video format. The HDMI input supports 8 channels of LPCM audio, as well as bitstream and HD bitstream pass-through extension. This configuration is ideal for basic video extension.

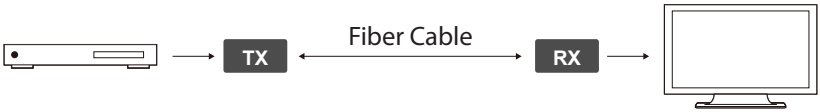

Note: This configuration does not use or require an external control centre such as the IP Master Controller to function. No audio insertion/extraction is performed in this configuration.

6.4 Advanced AV Extension

6.4.1 IP Master Controller

The IP Master Controller is a hardware solution designed to provide a unified and easy method to access and control all of the transmitters and receivers in a system. It provides a user-friendly, and operating system agnostic, web-based interface allowing easy control over all of the most critical functions within a distribution system.

The IP Master Controller hardware is an optional component and is not included with individual transmitter, receiver, or transceiver units. Please contact your authorised dealer for more information.

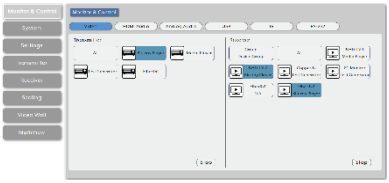

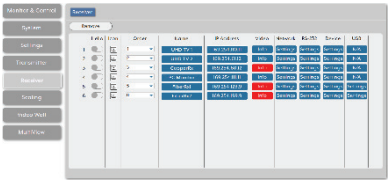

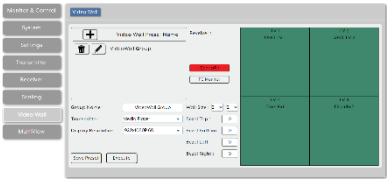

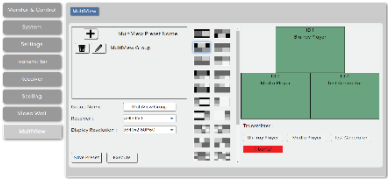

Note: Interface images are for example only and may differ from the delivered product. Full operational documentation can be found within the IP Master Controller's manual.

6.4.2 Configuration Examples

When combined with the IP Master Controller, and a 10 Gigabit Ethernet switch, this extension system gains a large number of additional configuration options including: multi-in/multi-out matrix switching with video wall creation, and a multiview output mode.

(1) Matrix Configuration

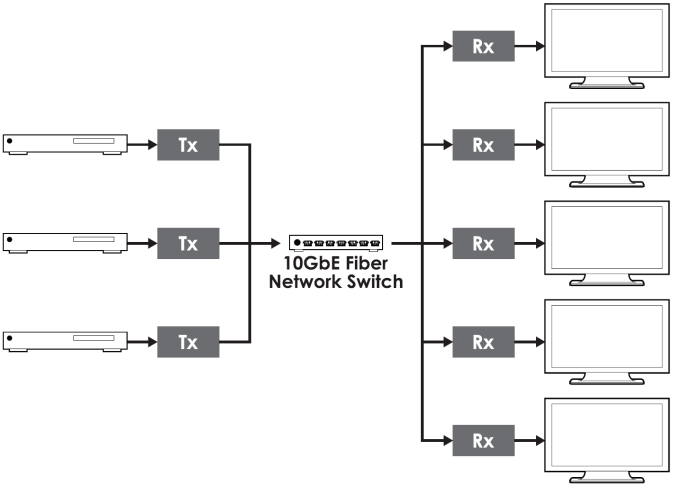

(2) Video Wall Configuration

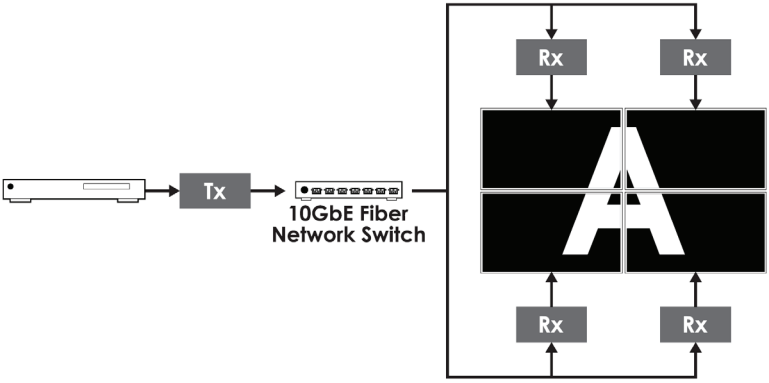

(3) Multiview (PiP/PoP/Quad/Etc.) Configuration

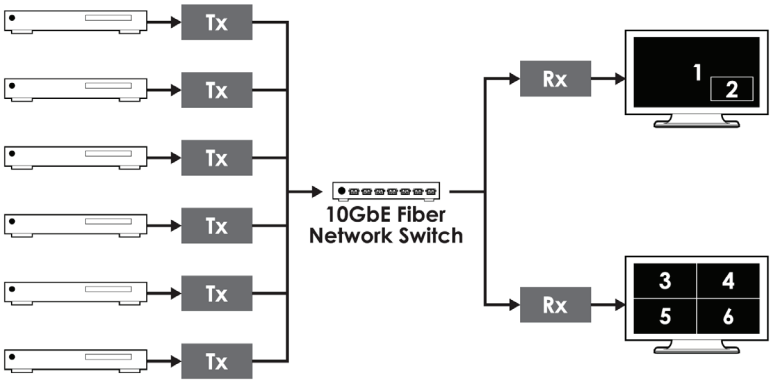

7. CONNECTION DIAGRAM

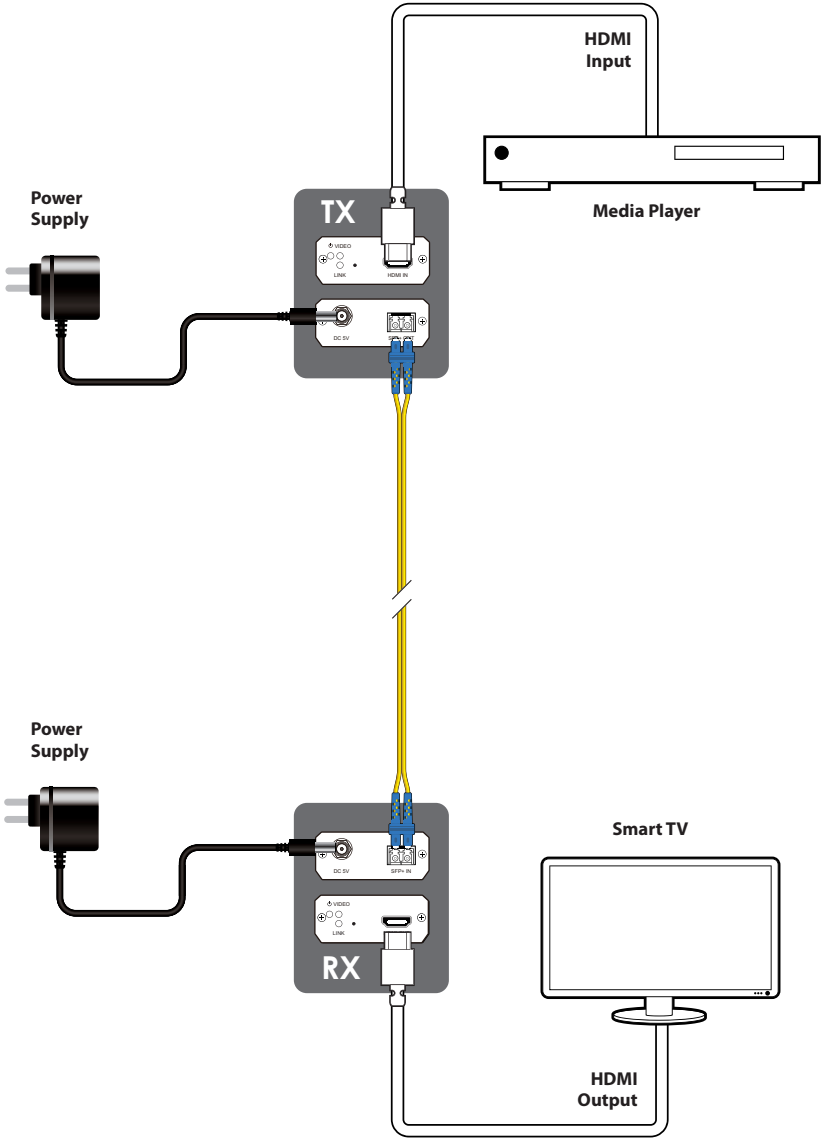

8. SPECIFICATIONS

8.1 Technical Specifications

HDMI Bandwidth	18Gbps
Fiber Bandwidth	10Gbps
Input Port	1×HDMI (Type-A)
Output Port	1×10GbE LAN (SFP+)
Power Supply	5V/2.6A DC (US/EU standards, CE/FCC/UL certified)
ESD Protection (HBM)	±8kV (Air Discharge) ±4kV (Contact Discharge)
Dimensions (W×H×D)	60mm×24.75mm×95mm [Case Only] 60mm×24.75mm×103mm [All Inclusive]
Weight	186g
Chassis Material	Metal (Aluminum)
Chassis Colour	Black
Operating Temperature	0˚C – 40˚C/32˚F – 104˚F
Storage Temperature	-20˚C – 60˚C/-4˚F – 140˚F
Relative Humidity	20 – 90% RH (Non-condensing)
Power Consumption	5.72W

8.2 Video Specifications

Supported Resolutions (Hz)	Input	Output
	HDMI	Fiber
720×400p@70/85	✓	✓
640×480p@60/72/75/85	✓	✓
720×480i@60	✓	✓
720×480p@60	✓	✓
720×576i@50	✓	✓
720×576p@50	✓	✓
800×600p@56/60/72/75/85	✓	✓
848×480p@60	✓	✓
1024×768p@60/70/75/85	✓	✓
1152×864p@75	✓	✓
1280×720p@50/60	✓	✓
1280×768p@60/75/85	✓	✓
1280×800p@60/75/85	✓	✓
1280×960p@60/85	✓	✓
1280×1024p@60/75/85	✓	✓
1360×768p@60	✓	✓
1366×768p@60	✓	✓
1400×1050p@60	✓	✓
1440×900p@60/75	✓	✓
1600×900p@60RB	✓	✓
1600×1200p@60	✓	✓
1680×1050p@60	✓	✓
1920×1080i@50/60	✓	✓

Supported Resolutions (Hz)	Input	Output
	HDMI	Fiber
1920×1080p@24/25/30	✓	✓
1920×1080p@50/60	✓	✓
1920×1080p@100/120	✓	✓
1920×1200p@60RB	✓	✓
2560×1440p@60RB	✓	✓
2560 x 1080@50/60	✓	✓
2560×1600p@60RB	✓	✓
2048×1080p@24/25/30	✓	✓
2048×1080p@50/60	✓	✓
3840×2160p@24, HDR10	✓	✓
3840×2160p@50/60 (4:2:0),HDR10	✓	✓
3840×2160p@50/60	✓	✓
4096×2160p@24/25/30	✓	✓
4096×2160p@50/60 (4:2:0)	✓	✓
4096×2160p@24, HDR10	✓	✓
4096×2160p@50/60 (4:2:0),HDR10	✓	✓
4096×2160p@50/60	✓	✓

8.3 Audio Specifications

8.3.1 Digital Audio

HDMI Input	
LPCM	
Max Channels	8 Channels
Sampling Rate (kHz)	32, 44.1, 48, 88.2, 96, 176.4, 192
Bitstream	
Supported Formats	Standard & High-Definition

10GbE Output	
LPCM	
Max Channels	8 Channels
Sampling Rate (kHz)	32, 44.1, 48, 88.2, 96, 176.4, 192
Bitstream	
Supported Formats	Standard & High-Definition

8.4 Cable Specifications

Cable Length	HD	FHD	4K UHD	4K UHD+	8K UHD
Premium High Speed HDMI Cable					
HDMI Input	15m	10m	5m	3m	×
Fiber Cable					
OM1 Multimode Fiber	30m				
OM2 Multimode Fiber	150m				
OM3 Multimode Fiber	300m				
OM4/OM5 Multimode Fiber	550m				

Bandwidth Category Examples:

- **HD Video**
  - 720p@60Hz
  - HDMI transmission rates lower than 3Gbps
  - HD-SDI (SMPTE 292M, 1.485Gbps)
- **FHD Video**
  - 1080p@60Hz
  - HDMI transmission rates between 3Gbps and 5.3Gbps
  - 3G-SDI (SMPTE 424M, 2.970Gbps)
- **4K UHD Video**
  - 4K@24/25/30Hz (8-bit colour) & 4K@50/60Hz (4:2:0, 8-bit colour)
  - HDMI transmission rates between 5.3Gbps and 10.2Gbps
  - 6G-SDI (SMPTE ST 2081, 6Gbps)
- **4K UHD+ Video**
  - 1080p@120Hz (10/12-bit HDR)
  - 4K@50/60Hz (4:4:4, 8-bit) & 4K@50/60Hz (4:2:0, 10/12-bit HDR)
  - HDMI transmission rates between 10.2Gbps and 18Gbps
  - 12G-SDI (SMPTE ST 2082, 12Gbps)
- **8K UHD Video**
  - 4K@120Hz (10/12-bit HDR)
  - 8K@24/25/30Hz (10/12-bit HDR) & 8K@50/60Hz (4:2:0, 8-bit colour)
  - HDMI transmission rates between 18Gbps and 48Gbps
  - 24G-SDI (SMPTE ST 2083, 24Gbps)

9. ACRONYMS

ACRONYM	COMPLETE TERM
10GbE	10 Gigabit Ethernet
4K UHD	4K Ultra-High-Definition (10.2Gbps max)
4K UHD+	4K Ultra-High-Definition (18Gbps max)
ADC	Analogue-to-Digital Converter
AVoIP	Audio/Video over IP
Cat.5e	Enhanced Category 5 cable
Cat.6	Category 6 cable
Cat.6A	Augmented Category 6 cable
Cat.7	Category 7 cable
DAC	Digital-to-Analogue Converter
dB	Decibel
DHCP	Dynamic Host Configuration Protocol
EDID	Extended Display Identification Data
GbE	Gigabit Ethernet
Gbps	Gigabits per second
HD	High-Definition
HDCP	High-bandwidth Digital Content Protection
HDMI	High-Definition Multimedia Interface
HDR	High Dynamic Range
HDTV	High-Definition Television
IEEE	Institute of Electrical and Electronics Engineers
IGMP	Internet Group Management Protocol
IP	Internet Protocol
kHz	Kilohertz

ACRONYM	COMPLETE TERM
LAN	Local Area Network
LED	Light-Emitting Diode
LPCM	Linear Pulse-Code Modulation
MAC	Media Access Control
MHz	Megahertz
PD	Powered Device
PiP	Picture in Picture
PoP	Picture outside of Picture
SFP	Small Form-factor Pluggable transceiver
SDVoE	Software Defined Video over Ethernet
SNR	Signal-to-Noise Ratio
TCP	Transmission Control Protocol
THD+N	Total Harmonic Distortion plus Noise
TMDS	Transition-Minimised Differential Signaling
UAC	USB Audio Class
UHDTV	Ultra-High-Definition Television
VoIP	Video over IP
WUXGA (RB)	Widescreen Ultra Extended Graphics Array (Reduced Blanking)
XGA	Extended Graphics Array
Ω	Ohm

CYP (UK) Ltd., Unit 7, Shepperton Business Park, Govett Avenue,
Shepperton, Middlesex, TW17 8BA
Tel: +44 (0) 20 3137 9180 | Email: sales@cypeurope.com
www.cypeurope.com
v1.00